VERSA-LINE

Submittal

JVA-T / JVB-T14 20 24
Versa-Line
Copper/Aluminum and
Steel Element Ratings

☐ **JVA Slip Jointed Enclosure**

Specification

☐ **JVB Slip Jointed Enclosure**

ENCLOSURE:

STYLE: Flat Top, Top Outlet
OUTLET: Stamped Louvers
Pencil Proof

LENGTHS: 2'0" thru 8'0" in 6" Increments
MAT'L:
- ☐ 16 Ga. CRS (Std)
- ☐ 14 Ga. CRS (Opt'l)
- ☐ 16 Ga. Stainless Steel (Opt'l)
- ☐ 14 Ga. Stainless Steel (Opt'l)
- ☐ 14 Ga. Aluminum (Opt'l)
- ☐ 12 Ga. Aluminum (Opt'l)

HEIGHT:
- ☐ 14"
- ☐ 20" (JVB only)
- ☐ 24" (JVB only)

FINISH:
- ☐ Baked Powder (Std).
- ☐ Baked Metallic (Opt'l)

ACCESSORIES:

☐ JV Overlapping Type
All accessories return to the wall at the bottom and have pre-punched holes for fastening to the wall.

ELEMENT:

TYPE: ☐ Cu/AL (Mechanically Expanded)
LENGTHS: 2'0" thru 12'6" in 1" Increments for 1" & 1-1/4" Cu.
2'0" thru 8'0" in 1" Increments for 3/4"Cu.

One End Flared (Std)

TYPE: ☐ IPS Steel (Mechanically Expanded)
LENGTHS: 2'0" thru 12'6" in 1" Increments
- ☐ NPT Thread both Ends (Std)
- ☐ Beveled Ends for Field Weld (Opt'l)

See Catalog for Working Pressures

BACKPLATE:

TYPE: ☐ Partial B/P
LENGTHS: 8'0" Only
MAT'L:
- ☐ 20 Ga. Prepainted (Std)
- ☐ 18 Ga. Galvannealed (Opt'l)

TYPE: ☐ Full Ht. B/P (Opt'l)
LENGTH: 2'0" thru 8'0" in 6" Increments
MAT'L:
- ☐ 20 Ga. Galvannealed (Opt'l)
- ☐ 20 Ga. Painted (Opt'l)
- ☐ 18 Ga. Painted (Opt'l)

AIRSEAL:

☐ 1/8" x 3/8" Closed Cell (Opt'l)

BRACKETS:

- ☐ Water Brkt w/B.B.
- ☐ Steam Brkt w/Brkt Mtd B.B. Hgr

DAMPER:

Damper Blades Factory Installed
- ☐ Knob Damper (Opt'l)
- ☐ Tamper Resistant (Opt'l)

☐ JVA-T14

ELEMENT TUBE SIZE	FIN SIZE HEIGHT x WIDTH	CRADLE NUMBER	A
3/4 COPPER	3 1/4 x 3 1/4	2	7"
1" COPPER	3 1/4 x 3 1/4	2	7 3/16
1 1/4 COPPER	3 1/4 x 3 1/4	1	6 5/8
1" STEEL	3 1/4 x 3 1/4	2	7 5/16
1 1/4 STEEL	3 1/4 x 3 1/4	1	6 13/16

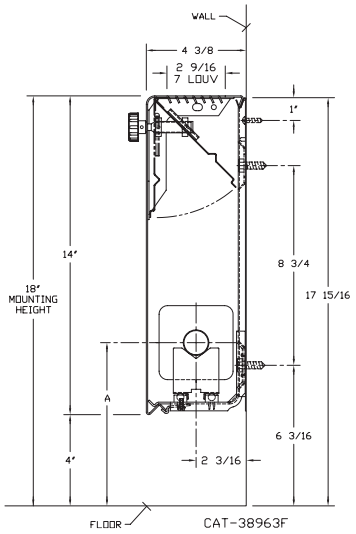

☐ JVB-T14 20 24

ELEMENT TUBE SIZE	FIN SIZE HEIGHT x WIDTH	CRADLE NUMBER	A
3/4 COPPER	3 5/8 x 4 1/4	2	7"
3/4 COPPER	4 1/4 x 4 1/4	3A	7 3/8
1" COPPER	3 5/8 x 4 1/4	2	7 3/16
1" COPPER	4 1/4 x 4 1/4	2	7 3/16
1 1/4 COPPER	3 5/8 x 4 1/4	2	7 5/16
1 1/4 COPPER	4 1/4 x 4 1/4	2	7 5/16
1" STEEL	4 1/4 x 4 1/4	2	7 5/16
1 1/4 STEEL	4 1/4 x 4 1/4	2	7 1/2
2" STEEL	4 1/4 x 4 1/4	1	7 1/4

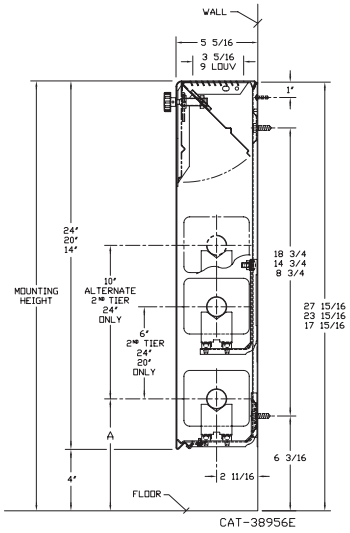

STERLING®
COMMERCIAL HYDRONIC PRODUCTS
260 North Elm St., Westfield, MA 01085
(413) 564-5535 Fax: (413) 562-8437
www.sterlingheat.com

MADE IN THE USA

10/22

PROJECT: _____ **DATE:** _____
LOCATION: _____
ARCHITECT: _____
ENGINEER: _____
CONTRACTOR: _____
PO NUMBER: _____

STYLE "JVA-T / JVB-T 14, 20, 24" VERSA-LINE

COPPER/ALUMINUM ELEMENTS

ALL RATINGS ARE IN BTU/HR/LIN FT AND BASED ON 3 FPS VELOCITY, 65° EAT

TUBE SIZE	CATALOG DESIGNATION	FIN SIZE HEIGHT X WIDTH	FINS PER FT.	FIN THICKNESS IN INCHES	ENCL DEPTH AND HEIGHT IN INCHES	TIERS AND CENTERS IN INCHES	MOUNTING HEIGHT IN INCHES	STEAM 215° FACTOR	HOT WATER (AVG.) 200°	190°	180°	170°	160°	150°	140°	130°	120°
									CORRECTION FACTORS FOR AVERAGE WATER TEMPERATURES								
								1.00	0.86	0.78	0.69	0.61	0.53	0.45	.40	.33	.26
3/4"	C3/4-33	3-1/4" SQ.	32	.020	14A	1	18	960	830	750	660	590	510	430	380	320	250
3/4"	C3/4-34	3-1/4" SQ.	40	.020	14A	1	18	1130	970	880	780	690	600	510	450	370	290
3/4"	C3/4-35	3-1/4" SQ.	50	.020	14A	1	18	1280	1100	1000	880	780	680	580	510	420	330
1"	C33	3-1/4" SQ.	32	.020	14A	1	18	940	810	730	650	570	500	420	380	310	240
1"	C34	3-1/4" SQ.	40	.020	14A	1	18	1080	930	840	750	660	570	490	430	360	280
1"	C35	3-1/4" SQ.	50	.020	14A	1	18	1220	1050	950	840	740	650	550	490	400	320
1 1/4"	C133	3-1/4" SQ.	32	.020	14A	1	18	900	770	700	620	550	480	410	360	300	230
1 1/4"	C134	3-1/4" SQ.	40	.020	14A	1	18	1040	890	810	720	630	550	470	420	340	270
1 1/4"	C135	3-1/4" SQ.	50	.020	14A	1	18	1190	1020	930	820	730	630	540	480	390	310
3/4"	C3/4-433	3-5/8" x 4-1/4"	32	.020	14B	1	18	1300	1120	1010	900	790	690	590	520	430	340
					20B	1	24	1380	1190	1080	950	840	730	620	550	460	360
					20B	2-6 CL	24	2015	1730	1570	1390	1230	1070	910	810	660	520
					24B	1	28	1420	1220	1110	980	870	750	640	570	470	370
					24B	2-6 CL	28	2100	1810	1640	1450	1280	1110	950	840	690	550
					24B	3-6 CL	28	2420	2080	1890	1670	1480	1280	1090	970	800	630
3/4"	C3/4-434	3-5/8" x 4-1/4"	40	.020	14B	1	18	1550	1330	1210	1070	950	820	700	620	510	400
					20B	1	24	1650	1420	1290	1140	1010	870	740	660	540	430
					20B	2-6 CL	24	2360	2030	1840	1630	1440	1250	1060	940	780	610
					24B	1	28	1700	1460	1330	1170	1040	900	770	680	560	440
					24B	2-6 CL	28	2460	2120	1920	1700	1500	1300	1110	980	810	640
					24B	3-6 CL	28	2800	2410	2180	1930	1710	1480	1260	1120	920	730
3/4"	C3/4-435	3-5/8" x 4-1/4"	50	.020	14B	1	18	1740	1500	1360	1200	1060	920	780	700	570	450
					20B	1	24	1870	1610	1460	1290	1140	990	840	750	620	490
					20B	2-6 CL	24	2690	2310	2100	1860	1640	1430	1210	1080	890	700
					24B	1	28	1960	1690	1530	1350	1200	1040	880	780	650	510
					24B	2-6 CL	28	2910	2500	2270	2010	1780	1540	1310	1160	960	760
					24B	3-6 CL	28	3290	2830	2570	2270	2010	1740	1480	1320	1090	860
1"	C433	3-5/8" x 4-1/4"	32	.020	14B	1	18	1380	1190	1080	950	840	730	620	550	460	360
					20B	1	24	1450	1250	1130	1000	880	770	650	580	480	380
					20B	2-6 CL	24	2260	1940	1760	1560	1380	1200	1020	900	750	590
					24B	1	28	1490	1280	1160	1030	910	790	670	600	490	390
					24B	2-6 CL	28	2340	2010	1830	1610	1430	1240	1050	940	770	610
					24B	3-6 CL	28	2690	2310	2100	1860	1640	1430	1210	1080	890	700
1"	C434	3-5/8" x 4-1/4"	40	.020	14B	1	18	1650	1420	1290	1140	1010	870	740	660	540	430
					20B	1	24	1710	1470	1330	1180	1040	910	770	680	560	440
					20B	2-6 CL	24	2440	2100	1900	1680	1490	1290	1100	980	810	630
					24B	1	28	1780	1530	1390	1230	1090	940	800	710	590	460
					24B	2-6 CL	28	2530	2180	1970	1750	1540	1340	1140	1010	830	660
					24B	3-6 CL	28	2880	2480	2250	1990	1760	1530	1300	1150	950	750
1"	C435	3-5/8" x 4-1/4"	50	.020	14B	1	18	1810	1560	1410	1250	1100	960	810	720	600	470
					20B	1	24	1960	1690	1530	1350	1200	1040	880	780	650	510
					20B	2-6 CL	24	2520	2170	1970	1740	1540	1340	1130	1010	830	660
					24B	1	28	2050	1760	1600	1410	1250	1090	920	820	680	530
					24B	2-6 CL	28	2730	2350	2130	1880	1670	1450	1230	1090	900	710
					24B	3-6 CL	28	3080	2650	2400	2130	1880	1630	1390	1230	1020	800
1-1/4"	C1433	3-5/8" x 4-1/4"	32	.020	14B	1	18	1350	1160	1050	930	820	720	610	540	450	350
					20B	1	24	1420	1220	1110	980	870	750	640	570	470	370
					20B	2 @ 6 CL	24	2220	1910	1730	1530	1350	1180	1000	890	730	580
					24B	1	28	1460	1260	1140	1010	890	770	660	580	480	380
					24B	2 @ 6 CL	28	2300	1980	1790	1590	1400	1220	1040	920	760	600
					24B	3 @ 6 CL	28	2650	2280	2070	1830	1620	1400	1190	1060	870	690
1-1/4"	C1434	3-5/8" x 4-1/4"	40	.020	14B	1	18	1580	1360	1230	1090	960	840	710	630	520	410
					20B	1	24	1680	1440	1310	1160	1020	890	760	670	550	440
					20B	2 @ 6 CL	24	2380	2050	1860	1640	1450	1260	1070	950	790	620
					24B	1	28	1740	1500	1360	1200	1060	920	780	700	570	450
					24B	2 @ 6 CL	28	2480	2130	1930	1710	1510	1310	1120	990	820	640
					24B	3 @ 6 CL	28	2830	2430	2210	1950	1730	1500	1270	1130	930	740
1-1/4"	C1435	3-5/8" x 4-1/4"	50	.020	14B	1	18	1780	1530	1390	1230	1090	940	800	710	590	460
					20B	1	24	1920	1650	1500	1320	1170	1020	860	770	630	500
					20B	2 @ 6 CL	24	2460	2120	1920	1700	1500	1300	1110	980	810	640
					24B	1	28	2010	1730	1570	1390	1230	1070	900	800	660	520
					24B	2 @ 6 CL	28	2650	2280	2070	1830	1620	1400	1190	1060	870	690
					24B	3 @ 6 CL	28	2990	2570	2330	2060	1820	1580	1350	1200	990	780

STYLE "JVA-T / JVB-T 14, 20, 24" VERSA-LINE

COPPER/ALUMINUM ELEMENTS

ALL RATINGS ARE IN BTU/HR/LIN FT AND BASED ON 3 FPS VELOCITY, 65° EAT

TUBE SIZE	CATALOG DESIGNATION	FIN SIZE HEIGHT X WIDTH	FINS PER FT.	FIN THICKNESS IN INCHES	ENCL DEPTH AND HEIGHT IN INCHES	TIERS AND CENTERS IN INCHES	MOUNTING HEIGHT IN INCHES	STEAM 215° FACTOR	HOT WATER (AVG.) 200°	190°	180°	170°	160°	150°	140°	130°	120°
									CORRECTION FACTORS FOR AVERAGE WATER TEMPERATURES								
								1.00	0.86	0.78	0.69	0.61	0.53	0.45	.40	.33	.26
3/4"	C3/4-43	4-1/4" SQ.	32	.020	14B	1	18	1400	1200	1090	970	850	740	630	560	460	360
					20B	1	24	1595	1370	1240	1100	970	850	720	640	530	410
					20B	2-6 CL	24	2215	1900	1730	1530	1350	1170	1000	890	730	580
					24B	1	28	1530	1320	1190	1060	930	810	690	610	500	400
					24B	2-6 CL	28	2305	1980	1800	1590	1410	1220	1040	920	760	600
					24B	3-6 CL	28	2650	2280	2070	1830	1620	1400	1190	1060	870	690
3/4"	C3/4-44	4-1/4" SQ.	40	.020	14B	1	18	1700	1460	1330	1170	1040	900	770	680	560	440
					20B	1	24	1950	1680	1520	1350	1190	1030	880	780	640	510
					20B	2-6 CL	24	2480	2130	1930	1710	1510	1310	1120	990	820	640
					24B	1	28	1870	1610	1460	1290	1140	990	840	750	620	490
					24B	2-6 CL	28	2580	2220	2010	1780	1570	1370	1160	1030	850	670
					24B	3-6 CL	28	2940	2530	2290	2030	1790	1560	1320	1180	970	760
3/4"	C3/4-45	4-1/4" SQ.	50	.020	14B	1	18	1745	1500	1360	1200	1060	920	790	700	580	450
					20B	1	24	2000	1720	1560	1380	1220	1060	900	800	660	520
					20B	2-6 CL	24	2465	2120	1920	1700	1500	1310	1110	990	810	640
					24B	1	28	2060	1770	1610	1420	1260	1090	930	820	680	540
					24B	2-6 CL	28	2480	2130	1930	1710	1510	1310	1120	990	820	640
					24B	3-6 CL	28	2800	2410	2180	1930	1710	1480	1260	1120	920	730
1"	C43	4-1/4" SQ.	32	.020	14B	1	18	1490	1280	1160	1030	910	790	670	600	490	390
					20B	1	24	1550	1330	1210	1070	950	820	700	620	510	400
					20B	2-6 CL	24	2390	2060	1860	1650	1460	1270	1080	960	790	620
					24B	1	28	1600	1380	1250	1100	980	850	720	640	530	420
					24B	2-6 CL	28	2470	2120	1930	1700	1510	1310	1110	990	820	640
					24B	3-6 CL	28	2840	2440	2220	1960	1730	1510	1280	1140	940	740
1"	C44	4-1/4" SQ.	40	.020	14B	1	18	1720	1480	1340	1190	1050	910	770	690	570	450
					20B	1	24	1820	1570	1420	1260	1110	960	820	730	600	470
					20B	2-6 CL	24	2570	2210	2000	1770	1570	1360	1160	1030	850	670
					24B	1	28	1890	1630	1470	1300	1150	1000	850	760	620	490
					24B	2-6 CL	28	2670	2300	2080	1840	1630	1420	1200	1070	880	690
					24B	3-6 CL	28	3040	2610	2370	2100	1850	1610	1370	1220	1000	790
1"	C45	4-1/4" SQ.	50	.020	14B	1	18	1930	1660	1510	1330	1180	1020	870	770	640	500
					20B	1	24	2100	1810	1640	1450	1280	1110	950	840	690	550
					20B	2-6 CL	24	2540	2180	1980	1750	1550	1350	1140	1020	840	660
					24B	1	28	2200	1890	1720	1520	1340	1170	990	880	730	570
					24B	2-6 CL	28	2840	2440	2220	1960	1730	1510	1280	1140	940	740
					24B	3-6 CL	28	3210	2760	2500	2210	1960	1700	1440	1280	1060	830
1-1/4"	C143	4-1/4" SQ.	32	.020	14B	1	18	1460	1260	1140	1010	890	770	660	580	480	380
					20B	1	24	1520	1310	1190	1050	930	810	680	610	500	400
					20B	2-6 CL	24	2350	2020	1830	1620	1430	1250	1060	940	780	610
					24B	1	28	1570	1350	1220	1080	960	830	710	630	520	410
					24B	2-6 CL	28	2430	2090	1900	1680	1480	1290	1090	970	800	630
					24B	3-6 CL	28	2790	2400	2180	1930	1700	1480	1260	1120	920	730
1-1/4"	C144	4-1/4" SQ.	40	.020	14B	1	18	1690	1450	1320	1170	1030	900	760	680	560	440
					20B	1	24	1790	1540	1400	1240	1090	950	810	720	590	470
					20B	2-6 CL	24	2520	2170	1970	1740	1540	1340	1130	1010	830	660
					24B	1	28	1860	1600	1450	1280	1130	990	840	740	610	480
					24B	2-6 CL	28	2620	2250	2040	1810	1600	1390	1180	1050	860	680
					24B	3-6 CL	28	2990	2570	2330	2060	1820	1580	1350	1200	990	780
1-1/4"	C145	4-1/4" SQ.	50	.020	14B	1	18	1900	1630	1480	1310	1160	1010	860	760	630	490
					20B	1	24	2060	1770	1610	1420	1260	1090	930	820	680	540
					20B	2-6 CL	24	2500	2150	1950	1720	1530	1330	1130	1000	830	650
					24B	1	28	2160	1860	1680	1490	1320	1140	970	860	710	560
					24B	2-6 CL	28	2780	2390	2170	1920	1700	1470	1250	1110	920	720
					24B	3-6 CL	28	3140	2700	2450	2170	1920	1660	1410	1260	1040	820

Note: Copper tube furnished flared one end standard.

STYLE "JVA-T / JVB-T 14, 20, 24" VERSA-LINE

STEEL ELEMENTS

ALL RATINGS ARE IN BTU/HR/LIN FT AND BASED ON 3 FPS VELOCITY, 65° EAT

TUBE SIZE	CATALOG DESIGNATION	FIN SIZE HEIGHT X WIDTH	FINS PER FT.	FIN THICKNESS IN INCHES	ENCL DEPTH AND HEIGHT IN INCHES	TIERS AND CENTERS IN INCHES	MOUNTING HEIGHT IN INCHES	STEAM 215° FACTOR	HOT WATER (AVG.) 200°	190°	180°	170°	160°	150°	140°	130°	120°
									CORRECTION FACTORS FOR AVERAGE WATER TEMPERATURES								
								1.00	0.86	0.78	0.69	0.61	0.53	0.45	.40	.33	.26
1"	S33	3-1/4" SQ.	32	.032	14A	1	18	840	720	660	580	510	450	380	340	280	220
1"	S34	3-1/4" SQ.	40	.032	14A	1	18	965	830	750	670	590	510	430	390	320	250
1"	S35	3-1/4" SQ.	50	.032	14A	1	18	1035	890	810	710	630	550	470	410	340	270
1-1/4"	S133	3-1/4" SQ.	32	.032	14A	1	18	850	730	660	590	520	450	380	340	280	220
1-1/4"	S134	3-1/4" SQ.	40	.032	14A	1	18	960	830	750	660	590	510	430	380	320	250
1-1/4"	S135	3-1/4" SQ.	50	.032	14A	1	18	1000	860	780	690	610	530	450	400	330	260
1"	S43	4-1/4" SQ.	32	.032	14B	1	18	1200	1030	940	830	730	640	540	480	400	310
					20B	1	24	1250	1080	980	860	760	660	560	500	410	330
					20B	2-6 CL	24	2030	1750	1580	1400	1240	1080	910	810	670	530
					24B	1	28	1280	1100	1000	880	780	680	580	510	420	330
					24B	2-6 CL	28	2080	1790	1620	1440	1270	1100	940	830	690	540
					24B	3-6 CL	28	2390	2060	1860	1650	1460	1270	1080	960	790	620
1"	S44	4-1/4" SQ.	40	.032	14B	1	18	1420	1220	1110	980	870	750	640	570	470	370
					20B	1	24	1500	1290	1170	1040	920	800	680	600	500	390
					20B	2-6 CL	24	2200	1890	1720	1520	1340	1170	990	880	730	570
					24B	1	28	1560	1340	1220	1080	950	830	700	620	510	410
					24B	2-6 CL	28	2270	1950	1770	1570	1380	1200	1020	910	750	590
					24B	3-6 CL	28	2590	2230	2020	1790	1580	1370	1170	1040	850	670
1"	S45	4-1/4" SQ.	50	.032	14B	1	18	1485	1280	1160	1020	910	790	670	590	490	390
					20B	1	24	1570	1350	1220	1080	960	830	710	630	520	410
					20B	2-6 CL	24	2255	1940	1760	1560	1380	1200	1010	900	740	590
					24B	1	28	1635	1410	1280	1130	1000	870	740	650	540	430
					24B	2-6 CL	28	2325	2000	1810	1600	1420	1230	1050	930	770	600
					24B	3-6 CL	28	2630	2260	2050	1810	1600	1390	1180	1050	870	680
1-1/4"	S143	4-1/4" SQ.	32	.032	14B	1	18	1100	950	860	760	670	580	500	440	360	290
					20B	1	24	1150	990	900	790	700	610	520	460	380	300
					20B	2-6 CL	24	1860	1600	1450	1280	1130	990	840	740	610	480
					24B	1	28	1180	1010	920	810	720	630	530	470	390	310
					24B	2-6 CL	28	1910	1640	1490	1320	1170	1010	860	760	630	500
					24B	3-6 CL	28	2200	1890	1720	1520	1340	1170	990	880	730	570
1-1/4"	S144	4-1/4" SQ.	40	.032	14B	1	18	1410	1210	1100	970	860	750	630	560	470	370
					20B	1	24	1490	1280	1160	1030	910	790	670	600	490	390
					20B	2-6 CL	24	2190	1880	1710	1510	1340	1160	990	880	720	570
					24B	1	28	1550	1330	1210	1070	950	820	700	620	510	400
					24B	2-6 CL	28	2260	1940	1760	1560	1380	1200	1020	900	750	590
					24B	3-6 CL	28	2580	2220	2010	1780	1570	1370	1160	1030	850	670
1-1/4"	S145	4-1/4" SQ.	50	.032	14B	1	18	1475	1270	1150	1020	900	780	660	590	490	380
					20B	1	24	1560	1340	1220	1080	950	830	700	620	510	410
					20B	2-6 CL	24	2210	1900	1720	1520	1350	1170	990	880	730	570
					24B	1	28	1625	1400	1270	1120	990	860	730	650	540	420
					24B	2-6 CL	28	2280	1960	1780	1570	1390	1210	1030	910	750	590
					24B	3-6 CL	28	2580	2220	2010	1780	1570	1370	1160	1030	850	670
2"	S242	4-1/4" SQ.	25	.032	14B	1	18	1080	930	840	750	660	570	490	430	360	280
					20B	1	24	1120	960	870	770	680	590	500	450	370	290
					20B	2-6 CL	24	1790	1540	1400	1240	1090	950	810	720	590	470
					24B	1	28	1140	980	890	790	700	600	510	460	380	300
					24B	2-6 CL	28	1820	1570	1420	1260	1110	960	820	730	600	470
					24B	3-6 CL	28	2090	1800	1630	1440	1270	1110	940	840	690	540
2"	S243	4-1/4" SQ.	32	.032	14B	1	18	1260	1080	980	870	770	670	570	500	420	330
					20B	1	24	1310	1130	1020	900	800	690	590	520	430	340
					20B	2-6 CL	24	1980	1700	1540	1370	1210	1050	890	790	650	510
					24B	1	28	1340	1150	1050	920	820	710	600	540	440	350
					24B	2-6 CL	28	2020	1740	1580	1390	1230	1070	910	810	670	530
					24B	3-6 CL	28	2320	2000	1810	1600	1420	1230	1040	930	770	600

Notes: 1) Steel fins furnished as .032 thick, painted black.
2) NPT threads furnished on steel elements. Please use domestic fittings for proper installation.
3) The ends can be provided chamfered for field welded fittings when specified.

Steam Bracket and BB Hanger

ELEMENT TUBE SIZE	FIN SIZE HEIGHT x WIDTH	CRADLE NUMBER	A MIN	A MAX
3/4 COPPER	3 1/4 x 3 1/4	2	7 3/8	9 5/8
1" COPPER	3 1/4 x 3 1/4	2	7 1/2	9 3/4
1 1/4 COPPER	3 1/4 x 3 1/4	2	7 5/8	9 7/8
1" STEEL	3 1/4 x 3 1/4	2	7 5/8	9 3/4
1 1/4 STEEL	3 1/4 x 3 1/4	1	7 3/16	9 3/8

ELEMENT TUBE SIZE	FIN SIZE HEIGHT x WIDTH	CRADLE NUMBER	A MIN	A MAX
3/4 COPPER	3 5/8 x 4 1/4	2	7 3/8	8 3/4
	4 1/4 x 4 1/4	3A	7 11/16	9 1/16
1" COPPER	3 5/8 x 4 1/4	2	7 1/2	8 7/8
	4 1/4 x 4 1/4			
1 1/4 COPPER	3 5/8 x 4 1/4	2	7 5/8	9"
	4 1/4 x 4 1/4			
1" STEEL	4 1/4 x 4 1/4	2	7 5/8	9"
1 1/4 STEEL	4 1/4 x 4 1/4	2	7 7/8	9 1/4
2" STEEL	4 1/4 x 4 1/4	1	7 5/8	9"

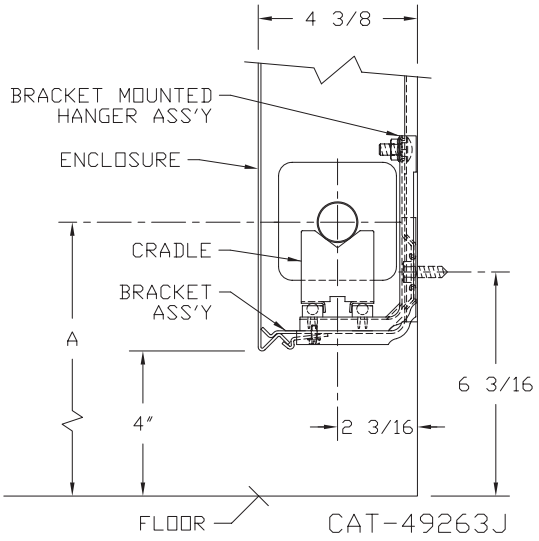

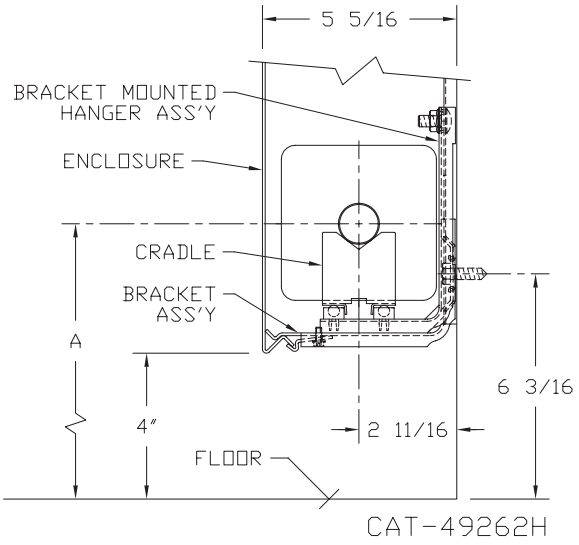

Design Data

COMMERCIAL FINNED TUBE CHARTS FOR RATING CORRECTIONS

For assistance with ratings and selection, please use our online Specifier.

CORRECTION FACTORS FOR WATER TEMPERATURES AND AIR TEMPERATURES OTHER THAN STANDARD

AVERAGE WATER TEMP. °F	ENTERING AIR TEMPERATURE °F														
	45	55	STD 65	70	75	80	85	90	95	100	110	120	130	140	150
90	.19	.13	.11	.06											
100	.25	.19	.15	.11	.08	.06									
110	.31	.25	.20	.16	.13	.11	.08	.06							
120	.38	.31	.26	.21	.19	.16	.13	.11	.08	.06					
130	.45	.38	.33	.28	.25	.21	.19	.16	.13	.11	.06				
140	.53	.45	.40	.34	.31	.28	.25	.21	.19	.16	.11	.06			
150	.61	.53	.45	.41	.38	.34	.31	.28	.25	.21	.16	.11	.06		
160	.69	.61	.53	.49	.45	.41	.38	.34	.31	.28	.21	.16	.11	.06	
170	.77	.69	.61	.57	.53	.49	.45	.41	.38	.34	.28	.21	.16	.11	.06
180	.86	.77	.69	.65	.61	.57	.53	.49	.45	.41	.34	.28	.21	.16	.11
190	.95	.86	.78	.73	.69	.65	.61	.57	.53	.49	.41	.34	.28	.21	.16
200	1.05	.95	.86	.82	.77	.73	.69	.65	.61	.57	.49	.41	.34	.28	.21
210	1.14	1.05	.95	.91	.86	.82	.77	.73	.69	.65	.57	.49	.41	.34	.28
▶ 215 (STD.)	1.19	1.09	1.00	.95	.91	.86	.82	.77	.73	.69	.61	.53	.45	.38	.31
220	1.24	1.14	1.05	1.00	.95	.91	.86	.82	.77	.73	.65	.57	.49	.41	.34
230	1.34	1.24	1.14	1.09	1.05	1.00	.95	.91	.86	.82	.73	.65	.57	.49	.41
240	1.44	1.34	1.25	1.19	1.14	1.09	1.05	1.00	.95	.91	.82	.73	.65	.57	.49
250	1.55	1.44	1.34	1.29	1.24	1.19	1.14	1.09	1.05	1.00	.91	.82	.73	.65	.57
260	1.66	1.55	1.44	1.39	1.34	1.29	1.24	1.19	1.14	1.09	1.00	.91	.82	.73	.65
270	1.76	1.66	1.55	1.50	1.44	1.39	1.34	1.29	1.24	1.19	1.09	1.00	.91	.82	.73
280	1.87	1.76	1.66	1.60	1.55	1.50	1.44	1.39	1.34	1.29	1.19	1.09	1.00	.91	.82
290	1.99	1.87	1.76	1.71	1.66	1.60	1.55	1.50	1.44	1.39	1.29	1.19	1.09	1.00	.91
300	2.10	1.99	1.87	1.82	1.76	1.71	1.66	1.60	1.55	1.50	1.39	1.29	1.19	1.09	1.00

CORRECTION FACTORS FOR STEAM PRESSURES AND AIR TEMPERATURES OTHER THAN STANDARD

STEAM PRESSURE		ENTERING AIR TEMPERATURE °F														
GAUGE	ABS. PSI	TEMP. °F	45	55	STD 65	70	75	80	85	90	100	110	120	130	140	150
(VAC) 15" HG	7.32	178.9	0.90	0.80	0.70	0.65	0.60	0.56	0.51	0.45	0.39	0.32	0.25	0.18	0.13	0.08
(VAC) 10"	9.78	192.2	1.02	0.91	0.81	0.76	0.71	0.66	0.62	0.55	0.48	0.40	0.33	0.26	0.20	0.14
(VAC) 5"	12.25	202.9	1.11	1.00	0.90	0.85	0.79	0.75	0.70	0.63	0.56	0.48	0.40	0.33	0.27	0.20
0 PSI	14.696	212.0	1.19	1.09	0.97	0.92	0.87	0.82	0.77	0.70	0.63	0.54	0.46	0.38	0.31	0.25
▶ .899	15.595	215.0	1.22	1.11	1.00	0.95	0.90	0.84	0.80	0.75	0.65	0.57	0.48	0.40	0.33	0.26
5	19.70	227.1	1.34	1.22	1.11	1.05	1.00	0.95	0.90	0.81	0.75	0.66	0.57	0.49	0.41	0.34
10	24.70	239.4	1.45	1.33	1.22	1.17	1.11	1.05	1.00	0.91	0.85	0.75	0.66	0.58	0.50	0.42
15	29.70	249.8	1.55	1.43	1.31	1.26	1.20	1.14	1.09	1.00	0.94	0.84	0.75	0.66	0.57	0.49
20	34.70	258.5	1.63	1.52	1.40	1.33	1.28	1.23	1.17	1.07	1.02	0.92	0.82	0.73	0.64	0.55
25	39.70	266.8	1.71	1.59	1.47	1.41	1.36	1.30	1.25	1.15	1.09	0.98	0.89	0.80	0.71	0.62
30	44.70	274.0	1.78	1.66	1.54	1.48	1.42	1.37	1.31	1.21	1.15	1.05	0.95	0.85	0.76	0.68
40	54.70	286.7	1.91	1.79	1.66	1.61	1.54	1.49	1.43	1.32	1.27	1.16	1.06	0.97	0.87	0.78
50	64.70	297.7	2.02	1.90	1.77	1.71	1.65	1.60	1.54	1.42	1.37	1.26	1.16	1.06	0.96	0.87
60	74.70	307.3	2.10	2.00	1.87	1.81	1.75	1.69	1.63	1.51	1.47	1.35	1.25	1.15	1.05	0.95
70	84.70	316.0	2.20	2.09	1.95	1.89	1.83	1.77	1.71	1.59	1.55	1.44	1.33	1.23	1.12	1.03
80	94.70	323.9	2.27	2.17	2.03	1.97	1.91	1.85	1.80	1.69	1.63	1.52	1.41	1.31	1.20	1.10
90	104.70	331.2	2.36	2.24	2.11	2.05	1.98	1.93	1.87	1.74	1.70	1.59	1.48	1.38	1.28	1.17
100	114.70	337.9	2.43	2.31	2.18	2.11	2.05	2.00	1.94	1.81	1.77	1.65	1.54	1.44	1.33	1.23
125	139.70	352.9	2.59	2.47	2.33	2.27	2.21	2.16	2.10	1.96	1.92	1.80	1.69	1.59	1.48	1.38
150	164.70	365.9	2.73	2.62	2.47	2.43	2.35	2.29	2.23	2.08	2.05	1.94	1.82	1.72	1.61	1.51
175	189.70	377.4	2.86	2.74	2.60	2.54	2.47	2.41	2.35	2.21	2.17	2.05	1.95	1.85	1.73	1.63
200	214.70	387.8	2.95	2.85	2.71	2.63	2.58	2.52	2.47	2.31	2.29	2.17	2.06	1.96	1.84	1.75

From Keenan and Keyes — Linear Interpolation. NOTE: Gauge pressure should be corrected for altitude.

Rate of pitch for steam ½"drop over 20-foot run.

Design Data

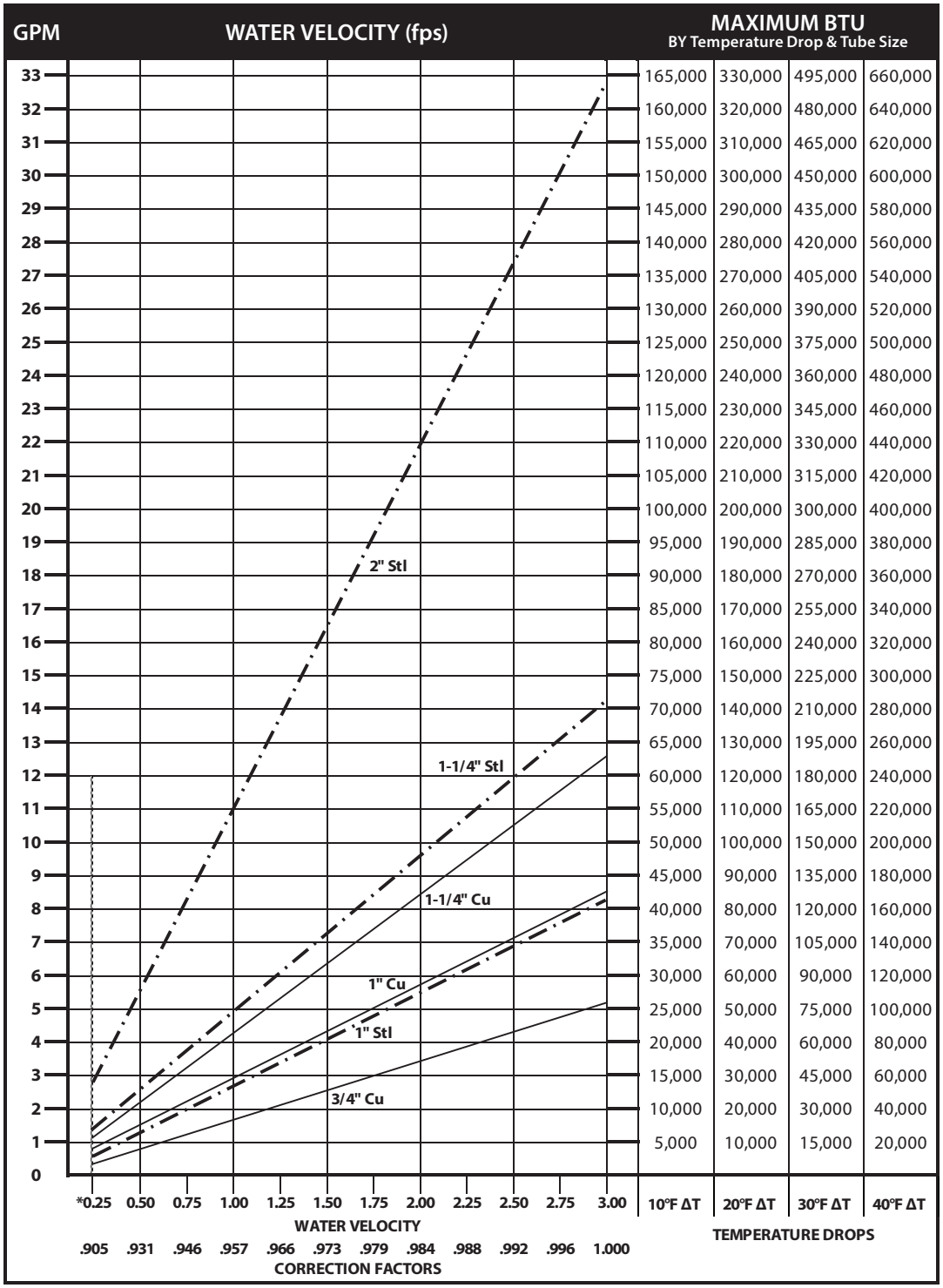

*Do not design below .25 fps.

DYNAMIC FORMULAS

BTU = GPM x 500 x TD

$$GPM = \left(\frac{BTU}{500}\right) \div TD$$

$$TD = \left(\frac{BTU}{500}\right) \div GPM$$

Pressure Drop at Given Water Velocities (Feet of Water per 100 ft. of pipe) based on Hazen - Williams calculation

Nominal Pipe Size	Water Velocity (ft/sec)											
	0.25	0.50	0.75	1.00	1.25	1.50	1.75	2.00	2.25	2.50	2.75	3.00
3/4" Copper	0.06	0.20	0.42	0.72	1.09	1.53	2.04	2.61	3.25	3.95	4.71	5.53
1" Copper	0.04	0.15	0.32	0.54	0.81	1.14	1.52	1.94	2.42	2.94	3.50	4.11
1 1/4" Copper	0.03	0.12	0.25	0.43	0.64	0.90	1.20	1.54	1.92	2.33	2.78	3.26
1" Steel	0.04	0.15	0.32	0.54	0.81	1.14	1.52	1.95	2.42	2.94	3.51	4.12
1 1/4" Steel	0.03	0.11	0.23	0.40	0.60	0.84	1.12	1.44	1.79	2.17	2.59	3.05
2" Steel	0.02	0.07	0.14	0.25	0.37	0.52	0.69	0.89	1.10	1.34	1.60	1.88

Design Data

GUARANTEED WORKING PRESSURES

1" IPS — 780 at Temperatures up to 650˚F.
1-1/4" IPS — 660 at Temperatures up to 650˚F.
2" IPS — 405 at Temperatures up to 650˚F.
1-1/4" CU — 194 at Temperatures up to 300˚F.
1" CU 204 at Temperatures up to 300˚F.
3/4" CU 218 PSI at Temperatures up to 300˚F.

MAXIMUM PRESSURES AT OTHER TEMPERATURES ARE AVAILABLE UPON REQUEST.

Pipe Water Capacities and Quantities Circulated at Velocity of 3 Feet Per Second

Nominal Pipe Size	Pipe I.D. (inches)	Gals Per Lin. Ft.	GPM @ 3' per sec Velocity
3/4" Copper	0.835	0.028	5.12
1" Copper	1.077	0.047	8.52
1 1/4" Copper	1.315	0.071	12.70
1" Steel	1.075	0.047	8.49
1 1/4" Steel	1.395	0.079	14.29
2" Steel	2.115	0.183	32.85

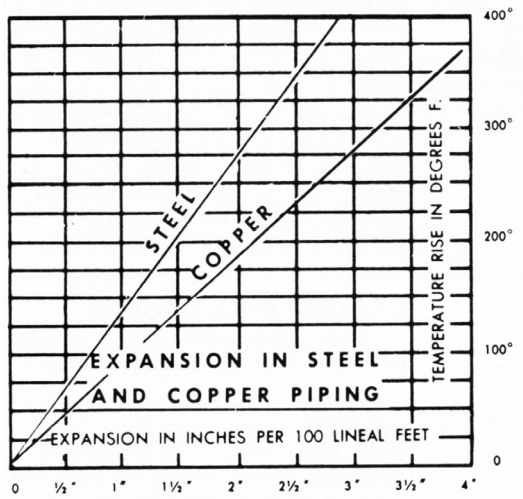

Glycol Correction Factors

Fluid Temperature 200°F

% Solution	Ethylene Glycol	Propylene Glycol
20	.952	.988
30	.921	.968
40	.888	.943
50	.852	.912

Fluid Temperature 180°F

% Solution	Ethylene Glycol	Propylene Glycol
20	.946	.982
30	.913	.961
40	.879	.934
50	.842	.902

Fluid Temperature 140°F

% Solution	Ethylene Glycol	Propylene Glycol
20	.934	.97
30	.898	.946
40	.861	.916
50	.821	.881

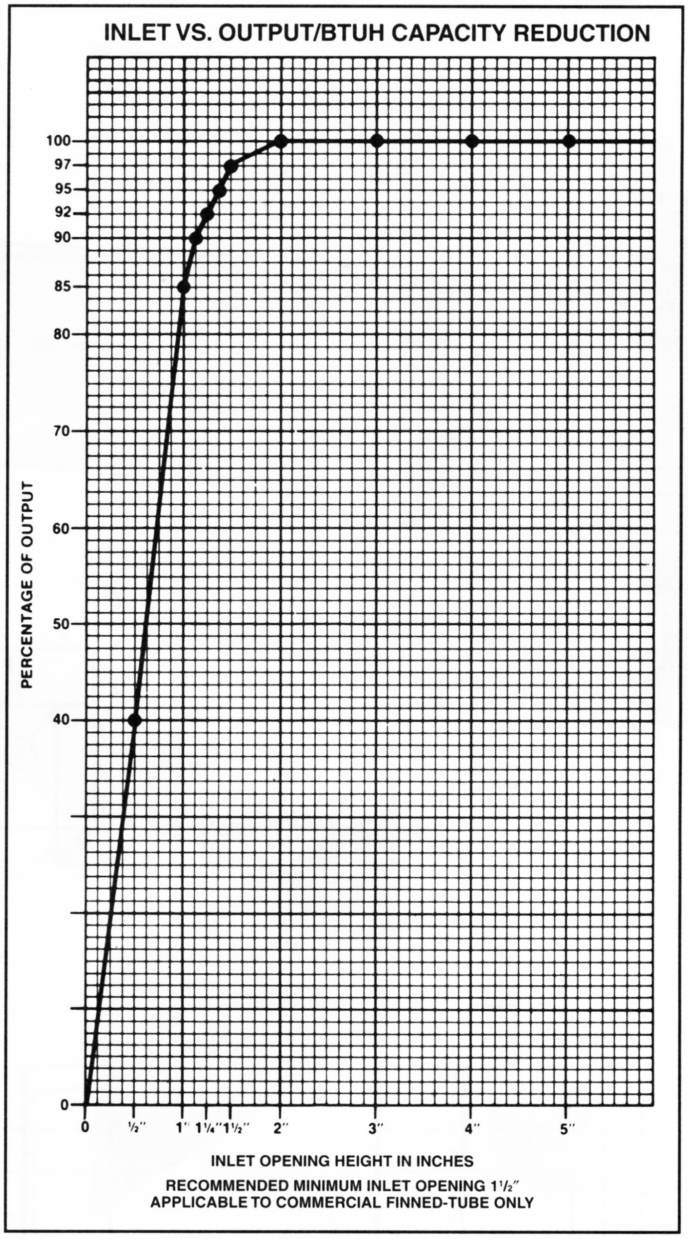

ALTITUDE FACTORS

Approximate factors for convective heat value at varying altitudes

Altitude	Ferrous Units	Copper Alum. Units
Sea Level	1.000	1,000
1,000 ft.	.984	.969
2,000 ft.	.968	.938
3,000 ft.	.952	.908
4,000 ft.	.936	.878
5,000 ft.	.920	.850
6,000 ft.	.904	.822
7,000 ft.	.889	.795
8,000 ft.	.874	.768
9,000 ft.	.859	.743
10,000 ft.	.844	.718
15,000 ft.	.771	.603
20,000 ft.	.703	.502